ROKAE

ROKAE Collaborative Robot

Intelligent Palletizing Solution



ROKAE Collaborative Robot Palletizing Workstation

Create a Zero-Code intelligent palletizing solution for customers

- Complete installation and debugging within **1 hour**
- Set a new stack type within **5 minutes**
- **9 to 20** boxes per minute
- Create up to **1,000** palletizing paths for a single recipe
- The maximum supported pallet size is **1,400mm×1,400mm**
- Stack **2 types of** products at a time
- Support **label orientation**
- Achieve free switch between **single mode and double suction** mode

Flexible collaborative robot

Heavy-payload flexible collaborative robot for palletizing, with a maximum payload of 45 kg, which is safe, efficient, and cost-effective

Workstation base

Portable mobile fixed/lifting base
The maximum palletizing height is 2,600 mm

Palletizing process package

13.3-inch high-sensitivity capacitive touch screen intelligent palletizing package, 0 programming

Pallet positioning system

Pallet detection and mechanical positioning system, with auxiliary positioning accuracy of 1 mm



End suction cup

High-suction sponge/vacuum suction cup
Applicable to products of various sizes, weights, and materials

Control button

One-key start, pause, emergency stop, and reset of the device

Roller line (optional)

Adjustable height 650 mm-730 mm for quick adaptation to the production line

Electric box control cabinet

Self-developed highly integrated control cabinet with low energy consumption

Safety system (optional)

Partition cooperation mode and safety stop function are available due to optional safety lidar/safety grating

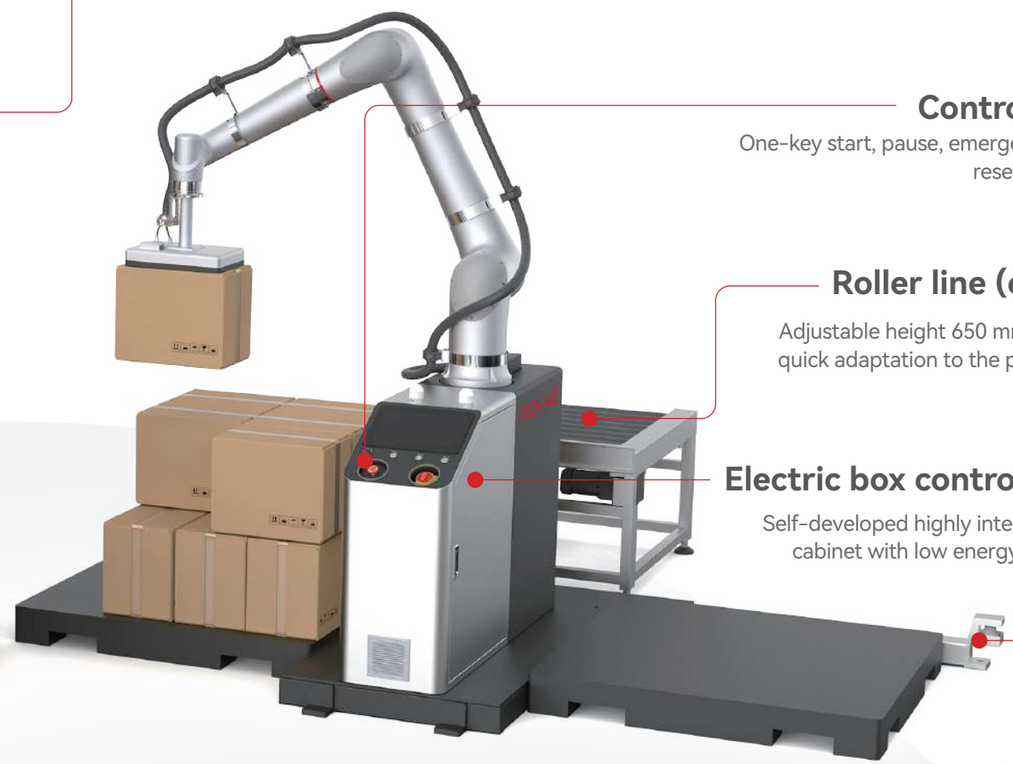

Product Advantages

45Kg Ultra-Large Payload

Optional professional 5-axis collaborative palletizing robot

Easily adapts to food & beverage, medical, daily chemical industries

9~20 boxes/min Ultra-High Efficiency

Singularity-free design for smooth movements

Global vibration suppression tech ensures fast & neat operation

TÜV-Class Ultimate Safety

≥21 TÜV safety certifications, German TÜV functional safety certified (whole machine)

SIL3 independent safety controller with dual-channel redundant monitoring

0-Code Fast Deployment

Graphical programming & drag teaching for quick mastery (no experience required)

Automatic pallet pattern & path generation, 5-minute rapid palletizing type change

Joint Force Sensing Tech Upgrade

Built-in joint torque sensors (no extra installation)

Extremely sensitive flexible drag teaching & collision stop

Multi-Functional Flexible Production

500+ programs storage; quick switch between single/double grippers & single/dual lines; flexible production via multi-robot collaboration

Expandable IO, full bus communication, adaptable to various scenarios

Palletizing Process Package

Visual configuration 4-step setup for new palletizing patterns



- i. Set pallet size
- ii. Set product size
- iii. Automatically generate palletizing pattern
- iv. Set stacking style

Auto Palletizing Pattern

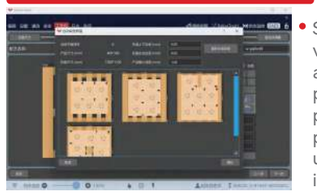

- Supports automatic generation of various palletizing patterns — array, cross, and loop — based on pallet or box dimensions. Custom patterns can also be defined. The palletizing layout can be configured in just 2 minutes, greatly improving setup efficiency.

One-Click Product Changeover



- The operation interface supports one-click changeover for fast and efficient product switching.

Multi-Grip Modes

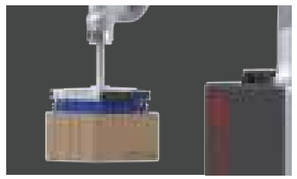

- Supports multiple gripping strategies, including multi-pick & multi-place, multi-pick & sequential-place, and single-pick & single-place, improving palletizing efficiency by up to 80%.

Labeling

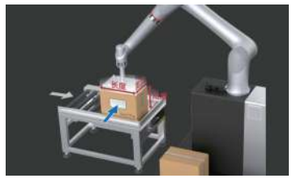

- Allows unified label orientation and configurable box entry direction to meet more complex palletizing requirements.

Technical Parameters

	RKE-PAR17 (fixed)	RKE-PAR17 (lifting)	RKE-PAR25 (fixed)	RKE-PAR25 (lifting)	RKE-PAR35 (fixed)	RKE-PAR45 (fixed)
Maximum payload* (including suction device)	17 kg		25 kg		35 kg	45 kg
Maximum working radius	2,047 mm		1,798 mm		2,246 mm	1,947 mm
Maximum palletizing height* (including pallets)	1,950 mm	2,450 mm	1,650 mm	2,150 mm	2,200 mm / 2600 mm*	1,850 mm
Maximum palletizing speed*	Single grip: ≤10 boxes/minute Dual grip: < 20 boxes/minute					
Repeated positioning accuracy	±0.05 mm					
Communication mode	TCP/IP , Modbus TCP, EtherCAT, Profinet, Ethernet/IP, DeviceNet, CC-Link, CC-Link IE Field Basic					
IO quantity	32 digital input, 32 digital output					
IP protection level	IP67 for robot body					
Temperature range	0 ~ 50℃					
Power source	AC 200-240V, 50-60Hz					
Maximum power	2.5 kw	3.5 kw	2.5 kw	3.5 kw	4 kw	4 kw
Total weight*	About 400 kg	About 450 kg	About 400 kg	About 450 kg	About 800 kg	About 800 kg
Floor area	1,300 mm × 1,650 mm				1,600 mm × 1,650 mm	
Minimum Factory Height	3 m	3.6 m	2.5 m	3.1 m	3.5 m / 3.8 m	2.7 m
Compatible product size	Length (250-550) mm × width (200-500) mm × height (150-400) mm, those of special sizes shall be equipped with a suction device					
Safety function	Support over 21 adjustable safety functions such as collision detection, virtual wall, and cooperative mode					
Certification	ISO/TS 15066, ISO 13849-1/PL d, ISO10218-1, ISO 12100, EU CE Certification, NSF Certification					

- When configured with the accompanying suction cups, the maximum payload of the product without end effectors is 14 kg, 20 kg, 30 kg, or 38 kg.
- The actual palletizing speed depends on product characteristics and palletizing pattern; for single-piece handling, the maximum palletizing speed is 10 boxes/min.
- The actual palletizing height depends on product dimensions, palletizing pattern, and gripper type. When using a 1200 mm × 1200 mm pallet, the maximum palletizing height can generally be achieved.
- The actual minimum factory height depends on the actual palletizing height. When using a 1200 mm × 1200 mm pallet and reaching the maximum palletizing height, the above minimum factory height applies.

Configuration List

Name	Quantity	Option	Remarks
Collaborative robot	1	Standard configuration	CR20 series or CR35 series collaborative robot, controller
Electric box control cabinet	1	Standard configuration	Integrated control cabinet
Workstation base	1	Standard configuration	Mobile fixed column/lifting column base, pallet positioning system
Palletizing process package	1	Standard configuration	Programming-free palletizing process package
End suction cup	1	Standard configuration	High-suction pneumatic sponge suction cup
Safety system	1	Optional	Safety radar/safety grating/safety vision/safety fence
Roller line	1	Optional	Length 1,000 mm × width 750 mm × height 650 mm

Product Dimension Diagram

Unit: mm

RKE-PAR25 and below

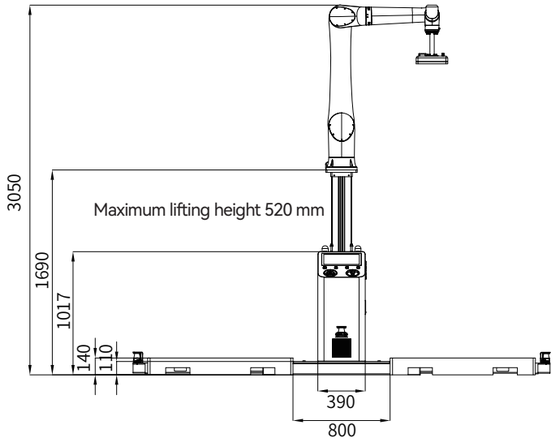

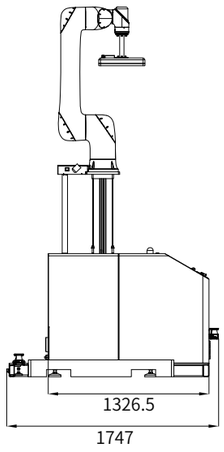

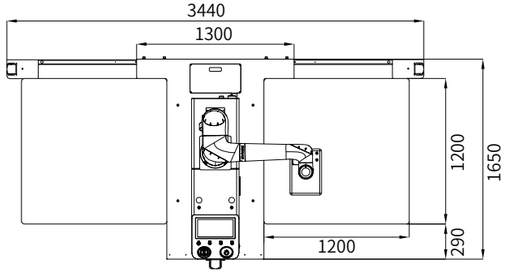

PAR-RKE35 and above

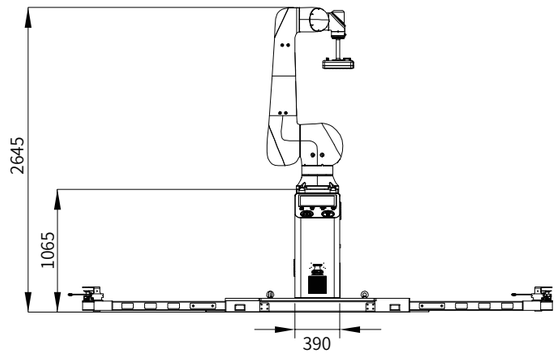

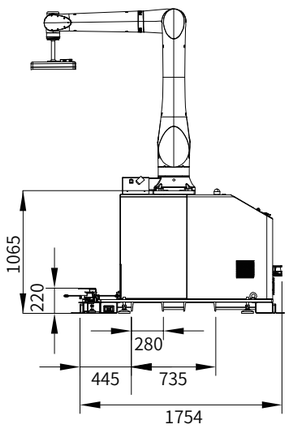

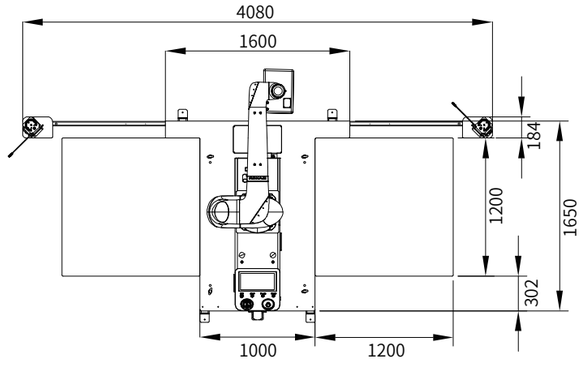

Applications

Food & Beverage Industry



Pet Treat Carton Palletizing



Condiment Carton Palletizing



Solid Beverage Carton Palletizing



Alcoholic Beverage Carton Palletizing



Bread Carton Palletizing



Snack Carton Palletizing

Pharmaceutical Industry



Chemical Drug Carton Palletizing



Medical Supplies 3D Vision Depalletizing



Medical Supplies Carton Palletizing



Traditional Chinese Medicine (TCM) Formula Carton Palletizing

Daily Chemical Industry



Plastic Product Carton Palletizing



Cleaning Supplies Carton Palletizing

Small Home Appliance Industry



Small Home Appliance Carton Palletizing

New Energy Industry



New Energy Aluminum Battery Case Palletizing

ROKAE

ROKAE Robotics

400-010-8700
www.rokae.com
sales@rokae.com

ll right reserved by ROKAE. Product model and specifications and technical indicators are subject to change without prior notice.